品立科技
PLink-AI

8F9E2
Edge AI Box

Key Feature

- Jetson™ AGX Orin: 275/200 TOPS, 64/32GB LPDDR5, 64GB eMMC
- Jetson™ AGX Xavier: 32 TOPS, 64/32GB LPDDR4X, 32GB eMMC
- Display: 1 × HDMI
- Rich I/O: 2 × RJ45, 2 × USB Type-A, 1 × Micro SD, 4 × GPIO, 4 × GPIO, 2 × CAN, 2 × RS232, 4 × RS485, 1 × Debug
- Expansion: Built-in full-size miniPCIe, M.2 M 2280, PCIe x16
- Operating Temperature: -25°C ~ +65°C
- Input Voltage: DC 12V ~ 36V
- Pre-installed Ubuntu

Introduction

The 8F9E2 is an industrial-grade edge AI computing device powered by NVIDIA® Jetson™ AGX Orin/ AGX Xavier, offering scalable AI performance from 32 TOPS to 275 TOPS for lightweight to multimodal AI tasks. It provides stable, low-latency local computing for industrial automation, energy, V2X, mobile robots, autonomous mining trucks and delivery vehicles.

It features triple protection, wide temp/voltage, 1× Gigabit PoE, Debug port, SIM slot and rich isolated I/O. Expansion slots support 4G, storage and industrial peripherals.

Website

Specifications

Module	Jetson AGX Orin 64GB	Jetson AGX Orin 32GB	Jetson AGX Xavier 64GB	Jetson AGX Xavier 32GB
AI Performance	275 TOPS	200 TOPS	32 TOPS	
GPU	2048-core NVIDIA Ampere GPU with 64 Tensor Cores	1792-core NVIDIA Ampere GPU with 56 Tensor Cores	512-core NVIDIA Ampere GPU with 64 Tensor Cores	
CPU	12-core Arm® Cortex® -A78AE v8.2 64-bit CPU 3MB L2 + 6MB L3	8-core Arm® Cortex® -A78AE v8.2 64-bit CPU 2MB L2 + 4MB L3	8-core NVIDIA Carmel Arm® v8.2 64-bit CPU 8MB L2 + 4MB L3	
Memory	64GB 256-bit LPDDR5 204.8GB/s	32GB 256-bit LPDDR5 204.8GB/s	64GB 256-bit LPDDR4x 136.5GB/s	32GB 256-bit LPDDR4x 136.5GB/s
Storage	64GB eMMC 5.1		32GB eMMC 5.1	
Video Encode	2x 4K60 (H.265)、4x 4K30 (H.265) 8x 1080p60 (H.265) 16x 1080p30 (H.265)	1x 4K60 (H.265)、3x 4K30 (H.265) 6x 1080p60 (H.265) 12x 1080p30 (H.265)	4x 4K60 (H.265)、8x 4K30 (H.265) 16x 1080p60 (H.265)、32x 1080p30 (H.265)	
Video Decode	1x 8K30 (H.265)、3x 4K60 (H.265) 7x 4K30 (H.265) 11x 1080p60 (H.265) 22x 1080p30 (H.265)	1x 8K30 (H.265)、2x 4K60 (H.265) 4x 4K30 (H.265)、9x 1080p60 (H.265) 18x 1080p30 (H.265)	2x 8K30 (H.265)、6x 4K60 (H.265) 12x 4K30 (H.265)、26x 1080p60 (H.265) 52x 1080p30 (H.265)	
Display	1x HDMI2.0			
USB	2x USB 3.0 Type-A、1x Micro USB(OTG)		1x USB3.0 Type-A、1x USB2.0 Type-A、1x Micro USB(OTG)	
Networking	2x RJ45（Supporting 1个POE）			
SD Card	1 x Micro SD			
Button	1 x Recovery 、1 x Reset			
Expansion	2 x Overall Length mini PCIe、2 x M.2 M (2280)、1x PCIex16		1 x Overall Length mini PCIe、1 x M.2 M (2280)、1x PCIex16	
Other I/O	4 x GPIO、4 x Opto-Isolated GPI、4 x Opto-Isolated GPO、2 x CAN、2 x I2C、1 x SPI、1x SIM			
Serial Ports	2 x RS232、4 x RS485、1 x Debug			
Temperature	-25°C ~ +65°C			
Dimensions	238mm×222mm×67mm			
Power	DC +12V~+36V			
Weight	3350g			
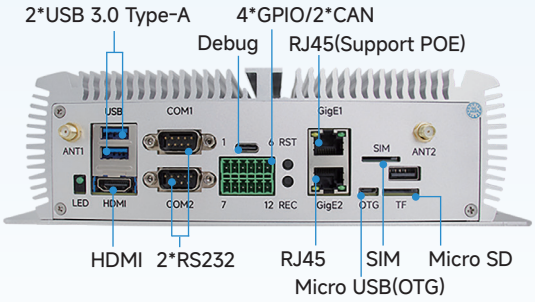
Interfaces